Journal of Religion and Health
https://doi.org/10.1007/s10943-025-02471-8

ORIGINAL PAPER

Psychometric Properties of the Belief in Divine Retribution Scale: Turkish Version, Validity, and Reliability Study in Turkey

Ece Alagöz[1] · **Merve Bat Tonkuş**[2]

Received: 25 July 2025 / Accepted: 17 September 2025
© The Author(s) 2025

Abstract

Belief systems significantly influence individuals' cognitive and emotional processes. Among these, belief in divine retribution notably affects moral behavior and provides a framework for interpreting life's challenges. This study aimed to adapt the Belief in Divine Retribution Scale (BDRS) into Turkish and to examine its psychometric properties in a Turkish sample. Convergent validity was further evaluated by investigating the relationship between the BDRS and religious obsessions. This methodological study included 425 participants aged 18 years and older residing in Turkey. The adaptation process involved translation, back-translation, expert review, and pilot testing. The adaptation process followed established guidelines for cross-cultural validation of religious and spiritual measures. Data were collected using the Belief in Divine Retribution Scale, the Penn Inventory of Scrupulosity (PIOS), and a demographic questionnaire. Construct validity was assessed through exploratory and confirmatory factor analyses, and reliability was measured using Cronbach's alpha (α). Convergent validity was analyzed with Pearson's correlation coefficients**.** The Turkish version maintained the original scale structure and identified a two-factor model: belief in divine reward (seven items) and belief in divine punishment (three items). The scale explained 64.9% of the total variance (KMO = 0.916; Bartlett's test, $p < 0.001$). Confirmatory factor analysis showed acceptable model fit (χ^2/df = 2.370; CFI = 0.960; RMSEA = 0.078). The overall scale demonstrated high internal consistency (Cronbach's α = 0.911). The subscales' Cronbach's alpha coefficients were 0.889 for Reward Belief and 0.799 for Punishment Belief. A significant positive correlation was found between belief in divine retribution and religious obsessions (r = 0.426, $p < 0.001$). These results support the validity and reliability of the Turkish version of the Belief in Divine Retribution Scale. It can be used to assess individuals' religious belief structures and their tendencies toward religious obsessions.

Keywords Religion and psychology · Psychometrics · Cross-cultural adaptation

Extended author information available on the last page of the article

Published online: 06 October 2025

Introduction

Belief systems are among the most fundamental structures that shape individuals' cognitive and emotional experiences. Recent research continues to emphasize the role of religious belief systems in shaping psychological functioning (Hamlaoui et al., 2025; Kavurkacı, 2023). One key part of these systems—the belief in divine reward and punishment—provides a strong cognitive–emotional framework that guides individuals' moral decisions, social relationships, and psychological functioning (Summermatter & Kaya, 2017; Vishkin et al., 2014). The idea that a divine being watches human behavior and ultimately responds with reward or punishment is a common epistemological foundation shared across many religious traditions (Laurin et al., 2012; McCullough & Willoughby, 2009).

Belief in Divine Punishment as a Moral and Psychological Framework

Belief in divine punishment functions not only as a moral guide that helps distinguish right from wrong but also as a belief system that assists individuals in understanding adversity and suffering. In this context, belief in divine retribution becomes intertwined with concepts such as fate, sin, forgiveness, and judgment—forming a core framework that shapes one's perception of God (Adega, 2023; Bulut, 2021). Specifically, beliefs in resurrection and the Day of Judgment motivate individuals to align their behavior with the reward–punishment dynamic, leading to significant psychological and moral effects at both personal and societal levels (Mutahhari, 2021).

Clinical and Cultural Significance

However, the psychological functions of belief in divine punishment are not limited to religious motivation. Clinical psychology research suggests that this belief can operate at a pathological level and may be linked to symptoms of obsessive–compulsive disorder (OCD) (Hamlaoui et al., 2025; Kavurkacı, 2023). Although the Diagnostic and Statistical Manual of Mental Disorders (5th ed.; American Psychiatric Association, 2013) does not classify 'religious obsessions' as a separate diagnosis, it recognizes them as a subtype of obsessions within the OCD framework. These obsessions often appear as intense anxiety driven by thoughts of breaking religious rules, committing sins, or facing divine punishment (American Psychiatric Association, 2013). The literature shows that religious obsessions are more common among highly religious individuals, who tend to be more sensitive to feelings of guilt, shame, and the expectation of punishment (Abramowitz et al., 2002; Sica et al., 2002).

Studies show that religious obsessions are common in people with OCD. In some groups, these obsessions have been reported in as many as 30% of cases, and in societies with strong religious values, the rate exceeds 50% (Tek & Ulug, 2001; Tolin et al., 2001). It has been suggested that beliefs about divine punishment might trigger or reinforce religious obsessions.

Recent conceptualizations continue to describe scrupulosity as a subtype of obsessive–compulsive disorder (OCD) focused on religious or moral anxiety, particularly concerning sin and divine judgment (Stevens & Smith-Schrandt, 2023). A recent systematic review reinforced the need for clearer conceptualization, accurate diagnosis, and culturally sensitive measurement tools in scrupulosity research (Toprak & Özçelik, 2024). Additionally, variations in OCD symptoms across cultures—including religious manifestations—have been emphasized in cross-cultural studies, underscoring the importance of culturally informed assessment (Hassan et al., 2024). These developments highlight the contemporary relevance and urgency of validating the Belief in Divine Retribution Scale in diverse cultural contexts such as Turkey.

Early conceptualizations identified scrupulosity as a subtype of obsessive–compulsive disorder characterized by religious or moral anxiety, particularly regarding divine punishment (Foa et al., 2001). Recent systematic reviews have emphasized the diagnostic complexity of scrupulosity, its treatment pathways, and measurement challenges, highlighting the need for culturally sensitive instruments. Furthermore, the prevalence of religious distress has been shown to extend to broader populations: Pakistani-origin Muslim emerging adults with negative religious coping strategies reported significantly higher perceived stress levels, indicating the mental health impact of retribution beliefs even outside a clinical sample. Similar trends were observed in studies from Kashmiri populations, where religiosity and scrupulosity were significant predictors of OCD severity. Taken together, these findings affirm the contemporary relevance and urgency of validating the Belief in Divine Retribution Scale in culturally diverse settings.

Measurement Gap

Taken together, these findings highlight the significant influence that belief in divine punishment has on shaping individuals' psychological processes. Despite this, the literature offers relatively few measurement tools that can comprehensively and culturally sensitively assess this specific belief system with strong psychometric validity. Existing instruments often measure general religiosity, religious orientation, or religious coping styles, but they fail to clearly and measurably address beliefs about divine justice, reward, and punishment (Hernández et al., 2020; Hill & Pargament, 2003; Kasapoğlu, 2016). The Belief in Divine Retribution Scale (BDRS), developed to fill this gap, is a unique tool that assesses individuals' beliefs about God's rewarding and punishing nature as separate constructs (Naeem et al., 2024). However, its valid application across different cultures and languages relies on thorough psychometric analyses during the adaptation process.

Study Aim

This study aims to adapt the Belief in Divine Retribution Scale into Turkish and examine its validity and reliability within a Turkish sample. Additionally, it explores the relationship between the scale and religious obsessions to provide evidence for

convergent validity. The results are expected to offer both conceptual insights and methodological contributions to research on the psychological effects of religious belief systems.

Methods

Study Design

This research employed a methodological and descriptive design to evaluate the psychometric properties of the Turkish version of the Belief in Divine Retribution Scale (BDRS; Naeem et al., 2024). The study was conducted to assess the scale's structural, convergent, and discriminant validity, as well as its reliability through internal consistency.

Population and Sample

The study population included individuals living in Turkey during the 2024–2025 academic year who met the inclusion criteria. The sample consisted of 425 participants aged 18 to 25 who voluntarily participated in the study. Since the scale has 10 items, this sample size provides approximately 42 participants per item, which is sufficient for psychometric validity and reliability testing (DeVellis, 2012; Tabachnick & Fidell, 2013). To ensure robust psychometric analysis, the total sample was divided into two independent groups. The first group ($n = 200$), referred to as the pilot group, was used for exploratory factor analysis (EFA). The second group ($n = 225$), referred to as the final test group, was used for confirmatory factor analysis (CFA). These groups were recruited at different stages of data collection to ensure sample independence and prevent overfitting. As the study involved only quantitative data, no personal identifiers or names were collected.

Data Collection Tools

Data were collected through face-to-face interactions between January and June 2025 using three instruments: the Personal Information Form, the Belief in Divine Retribution Scale (BDRS), and the Penn Inventory of Scrupulosity (Altın, 2009).

The researchers developed the Personal Information Form to gather participants' demographic and personal details. Drawing on a review of existing literature, the form includes closed-ended questions about age, gender, marital status, and religious beliefs. Sample items include: "Gender" (Female/Male), "Marital Status" (Married/Single), and "Religious Affiliation" (Islam, Christianity, Judaism, Buddhism, Deism, No Religion, Prefer not to say, Other). This form was used to identify independent variables and facilitate comparative analysis across different sociodemographic groups.

The Belief in Divine Retribution Scale (BDRS), developed by Naeem et al. (2024), measures individuals' beliefs in God's rewarding and punishing nature. It uses a five-point Likert scale from 1 (Never) to 5 (Always). The Belief in Divine

Retribution Scale (BDRS; Naeem et al., 2024) was used to measure individuals' beliefs in God's rewarding and punishing nature. This instrument was employed to evaluate the central construct of the present study.

The Penn Inventory of Scrupulosity (PIOS) was originally developed by Abramowitz et al. (2002) to measure the extent of religious obsessions. The Turkish version was adapted by Altın (2009) andsubsequently validated in Turkish samples by İnözü, Keser, and Karancı (2017). The scale emphasizes religious-themed obsessive thoughts and fears commonly seen in obsessive–compulsive disorder (OCD), such as disrespect toward God, improper ritual performance, or sins. The PIOS includes 19 items rated on a five-point Likert scale from 0 (Never) to 4 (Always), with no reverse-scored items. It features two subscales.

The Fear of God subscale includes items related to fear of damaging sacred places, performing rituals incorrectly, or being punished by God (Items 1, 3, 5, 6, 9, 10, 12, 13, 15, 17).

The Fear of Sin subscale includes items related to feeling sinful, breaking religious rules, or being disturbed by sinful thoughts (Items: 2, 4, 7, 8, 11, 14, 16, 18, 19).

Scores for each subscale are calculated individually using either the sum or the average of item scores. Higher scores on either subscale or the overall scale reflect greater levels of religious obsessions. The scale can be examined both at the total and subscale levels.

Data Analysis

Validity Studies

Linguistic Validity

The linguistic validity of the BDRS was confirmed through a detailed translation process. First, the original English version was independently translated into Turkish by two experts. These translations were then compared and combined into a single version. This Turkish version was then back-translated into English by two other bilingual experts. The back-translated version was compared with the original to find discrepancies, cultural mismatches, or semantic issues, which were then addressed. Later, a panel of language and subject-matter experts reviewed the items for linguistic clarity, cultural suitability, and theoretical consistency. The final Turkish version was tested with a small sample to evaluate item understandability, and no problems were reported. These steps verified the linguistic validity of the Turkish version. The translation and adaptation process followed established guidelines for religious and spiritual scale validation and translation (Koenig & Al Zaben, 2021).

Content Validity

Content validity evaluates how well an instrument represents the construct it aims to measure (Sigerson & Cheng, 2018). For this, a panel of 10 experts in psychology of

religion, psychometrics, and psychiatry assessed the relevance and theoretical representativeness of each item. Experts rated each item using a four-point Likert scale (1 = Not relevant, 4 = Highly relevant). The Content Validity Index (CVI) was calculated for each item, and items with CVI values above .80 were considered acceptable. Based on expert feedback, minor revisions were made to improve clarity and cultural appropriateness, ensuring the scale aligns with the target population.

Construct Validity

Construct validity was assessed through a three-step process. First, the Kaiser–Meyer–Olkin (KMO) measure and Bartlett's test of sphericity were conducted to evaluate sampling adequacy and the suitability of data for factor analysis. A KMO value above 0.60 and a significant Bartlett's test ($p < .001$) indicated that factor analysis was appropriate. Second, exploratory and confirmatory factor analyses were conducted on two independent samples to ensure methodological rigor. An exploratory factor analysis (EFA) was performed to identify the underlying factor structure. The number of factors, factor loadings, and the percentage of explained variance were analyzed. Third, a confirmatory factor analysis (CFA) was undertaken to assess how well the model fit the structure derived from the EFA. Model fit was evaluated using indices such as RMSEA, CFI, GFI, and χ^2/df, (Cristobal, Flavián, & Guinalíu, 2007). providing both exploratory and confirmatory evidence for the construct validity of the instrument. To enhance construct validity and avoid scale contamination in spirituality and health, we critically reviewed all items of the Belief in Divine Retribution Scale in our research. We followed recent methodological guidance aiming to prevent overlap between religious belief constructs and indicators of psychological distress or social functioning. Specifically, we heeded Bambling's (Bambling, 2025) warning about contaminating scales, adhered to the recommendations of Koenig and Carey (Koenig & Carey, 2024), and noted further analytic approaches suggested by Koenig and Carey (Koenig & Carey, 2025) for handling contaminated measures. These steps ensure that the BDRS distinctly measures divine reward and punishment beliefs without confounding effects.

Reliability Analysis

A reliable instrument must deliver consistent, stable, and sensitive measurements. Sensitivity reflects the ability to detect small differences, while consistency demonstrates coherence among items, and stability indicates similar results across repeated tests under the same conditions. The internal consistency of the BDRS and its subscales was evaluated using Cronbach's alpha (α), which assesses how closely related items are within a scale. Pearson correlation analysis was also conducted to explore the relationships between individual items and total scores. These analyses confirmed that the scale and its subscales have adequate reliability for research purposes.

Statistical Analysis

Data obtained in this study were analyzed using IBM SPSS Statistics version 25.0 and AMOS version 25.0 (Karagöz, 2016) (IBM Corp., Armonk, NY, USA). Descriptive statistics (mean, standard deviation, frequencies), exploratory factor analysis (EFA), confirmatory factor analysis (CFA), and internal consistency using Cronbach's alpha (α) were performed to examine the psychometric properties of the scale. As part of the descriptive statistics, the arithmetic means, standard deviations, minimum, and maximum values of the variables were calculated to provide summary information. For the validity studies of the scales, linguistic and content validity were initially established based on expert opinions. For construct validity, a multi-step procedure was employed. First, the Kaiser–Meyer–Olkin (KMO) measure of sampling adequacy and Bartlett's test of sphericity were conducted to assess the data's suitability for factor analysis. A KMO value of 0.60 or above and a significant Bartlett's test result ($p < 0.001$) were considered acceptable criteria for proceeding with factor analysis. To identify the factor structure, exploratory factor analysis (EFA) was conducted. The number of factors was determined by examining eigenvalues and the scree plot. Principal component analysis (PCA) was used as the extraction method, and Varimax rotation was applied to enhance interpretability. Subsequently, confirmatory factor analysis (CFA) was performed using IBM SPSS AMOS to test the accuracy of the factor structure derived from EFA. The model fit was evaluated using several goodness-of-fit indices, including RMSEA, CFI, GFI, and $\chi 2$/df. For reliability analysis, internal consistency (measured by Cronbach's alpha coefficient) was calculated (Tavşancıl, 2014).

Additionally, Pearson's product-moment correlation coefficients were used to examine item-total correlations for each item. Throughout all analyses, the significance level was set at $p < 0.05$. An independent statistician reviewed all statistical analyses to ensure accuracy.

Results

A total of 200 participants took part in the pilot study, while 225 individuals participated in the final test phase. In the pilot group, 75.5% of the participants were female, and 24.5% were male. In the final test group, the gender distribution was 43.1% female and 56.9% male. Regarding marital status, 75% of participants in the pilot group were single, and 25% were married. In the final test group, 52.4% were single, while 47.6% were married. As for educational background, in the pilot group, 78% of participants held a university degree, 17.5% had graduate-level education, 4% had completed high school, and 0.5% had completed primary education. In the final test group, 86.2% were university graduates, 5.3% had graduate-level education, 6.7% were high school graduates, and 1.8% had completed primary education. In terms of religious beliefs, 89% of the pilot group

identified as Muslim, 5.5% reported having no religious affiliation, 3.5% preferred not to answer, 1.5% identified as Christian, and 0.5% as Deist. In the final test group, 93.8% identified as Muslims, 2.7% reported no religious affiliation, and 2.2% chose not to respond. The mean age of participants was 27.47 ± 10.31 years in the pilot group and 23.97 ± 6.18 years in the final test group. Participant demographic characteristics are summarized in Table 1.

Item analysis and internal consistency results for the Belief in Divine Retribution Scale are displayed in Table 2. Corrected item-total correlations in the pilot study ranged from .574 to .748 for the Reward Belief subscale and from .472 to .667 for the Punishment Belief subscale, indicating acceptable to strong relationships between each item and the overall scale. Corresponding Cronbach's α if item deleted values were all above .88, showing that each item contributed positively to internal consistency.

Exploratory factor analysis (EFA) conducted on the pilot data showed factor loadings ranging from 0.636 to 0.819 for Reward Belief and from 0.651 to 0.849 for Punishment Belief. In the final testing phase, confirmatory factor analysis (CFA) indicated factor loadings between .619 and .835 for Reward Belief and between .728 and .811 for Punishment Belief. Cronbach's α coefficients were .903 (pilot) and .889 (final) for Reward Belief, and .766 (pilot) and .799 (final) for Punishment Belief. The overall scale demonstrated excellent reliability, with total α values of 0.902 in the pilot study and 0.911 in the final test.

Table 1 Participant demographic characteristics ($N = 425$)

Variable	Pilot group (N = 200)		Final test group ($N = 225$)	
	n	%	*n*	%
Gender				
Female	151	75.5	97	43.1
Male	49	24.5	128	56.9
Marital status				
Single	150	75.0	118	52.4
Married	50	25.0	107	47.6
Educational background				
Primary education	1	0.5	4	1.8
High school	8	4.0	15	6.7
University degree	156	78.0	194	86.2
Graduate level	35	17.5	12	5.3
Religious belief				
Muslim	178	89.0	211	93.8
Christian	3	1.5	0	0
Deist	1	0.5	0	0
No religious affiliation	11	5.5	6	2.7
Prefer not to answer	7	3.5	5	2.2
Age (years)	$M = 27.47$, $SD = 10.31$		$M = 23.97$, $SD = 6.18$	

Table 2 Item-level psychometric properties, factor loadings, and reliability coefficients of the Belief in Divine Retribution Scale (pilot and final tests)

Subscale	Item No	Corrected item-total correlation (pilot)	Factor loading (pilot)	Factor loading (final test)	Cronbach's α (pilot)	Cronbach's α (final test)	Explained variance (%)	Cronbach's α if item deleted (pilot)
Reward Belief	I1	0.735	0.800	0.835	0.903	0.889		0.887
	I2	0.738	0.724	0.692				0.887
	I3	0.714	0.819	0.719				0.889
	I4	0.574	0.636	0.619				0.898
	I5	0.680	0.770	0.697				0.891
	I6	0.738	0.795	0.760				0.887
	I7	0.748	0.813	0.718			Pilot: 44.09% Final: 37.44%	0.886
Punishment Belief	I8	0.482	0.825	0.788	0.766	0.799		0.902
	I9	0.667	0.651	0.728				0.892
	I10	0.472	0.849	0.811			Pilot: 21.9% Final:27.45%	0.903
Total	–	–	–	–	0.902	0.911	Pilot: 66% Final: 64.9%	

Table 3 Results of KMO and Bartlett's test for the Belief in Divine Retribution Scale (pilot and final test)

Test	Pilot test result	Final test result	Interpretation
KMO (Kaiser–Meyer–Olkin)	0.910	0.916	Excellent sample adequacy
Bartlett's test–χ^2 (df = 45)	1049.306 ($p < .001$)	1189.817 ($p < .001$)	Suitable for factor analysis

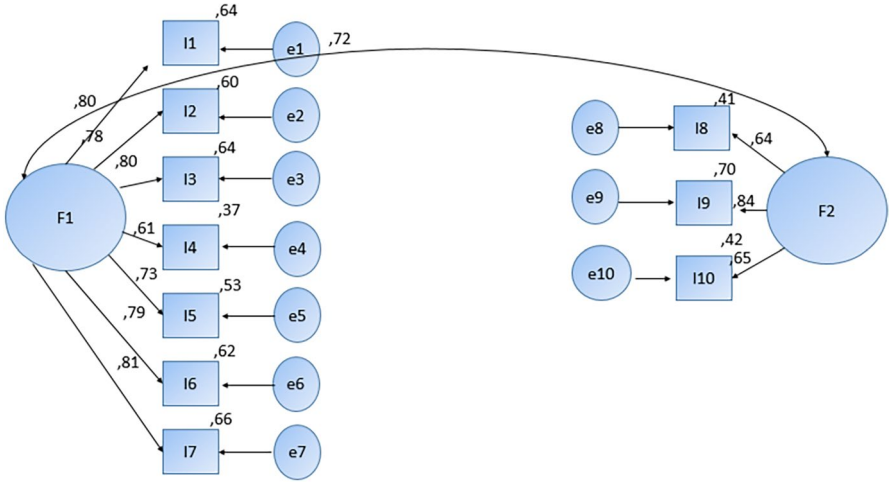

Fig. 1 Confirmatory factor analysis results from the pilot test

Regarding explained variance, the two-factor structure accounted for 66.00% of the total variance in the pilot study, with 44.09% explained by Reward Belief and 21.90% by Punishment Belief. In the final test, the overall explained variance was 64.90%, with 37.44% attributed to Reward Belief and 27.45% to Punishment Belief. These results strongly support the structural validity and internal consistency of the scale across both development phases.

Before conducting factor analyses, the data's suitability was assessed using the Kaiser–Meyer–Olkin (KMO) measure and Bartlett's test of sphericity. The KMO values were 0.910 for the pilot test and 0.916 for the final test, both indicating excellent sampling adequacy (Kaiser, 1974). Additionally, Bartlett's test of sphericity yielded statistically significant results for both the pilot test, $\chi 2(45) = 1049.306$, $p < .001$, and the final test, $\chi 2(45) = 1189.817$, $p < .001$, confirming that the correlation matrices were appropriate for factor analysis (Table 3).

Figure 1 shows the results of the confirmatory factor analysis (CFA) conducted during the pilot phase for the Belief in Divine Retribution Scale. The model describes a two-factor structure, consisting of F1 (Reward Belief) and F2 (Punishment Belief), corresponding to Items I1–I7 and I8–I10, respectively. All standardized factor loadings were statistically significant, ranging from 0.60 to 0.81 for the Reward Belief factor (F1) and from 0.64 to 0.70 for the Punishment Belief factor (F2), indicating strong relationships between items and factors. Notably, Item I4 had

a slightly lower loading (0.37), but it remained within acceptable limits for newly developed scales. The covariance between the two latent factors was 0.84, showing a strong positive relationship between Reward Belief and Punishment Belief. Error variances (e1–e10) were within expected ranges, and the model displayed conceptually consistent loading patterns, supporting the construct validity of the two-factor model.

Table 4 presents the model fit indices obtained from the confirmatory factor analyses (CFA) of the pilot and final tests. The values indicate that the two-factor model of the Belief in Divine Retribution Scale demonstrated an overall acceptable to good fit in both analyses. In the pilot test, the model fit was acceptable, with a χ^2/df ratio of 2.30, RMSEA = 0.076, and CFI = 0.957. Similarly, GFI and AGFI values were 0.907 and 0.854, respectively, while NFI and TLI were 0.927 and 0.930. These values meet the thresholds for acceptable model fit and approach the criteria for good fit in several indices. In the final test, the fit indices remained stable or improved slightly. The χ^2/df ratio was 2.37, with RMSEA = 0.078, CFI = 0.960, GFI = 0.917, AGFI = 0.874, NFI = 0.934, and TLI = 0.947. These findings support the robustness and replicability of the two-factor structure of the scale across different samples. Overall, both sets of CFA results confirm that the model fits the data well and provide further evidence of the structural validity of the scale.

Figure 2 shows the results of the confirmatory factor analysis (CFA) performed on the final test data for the Belief in Divine Retribution Scale. The expected two-factor structure was confirmed, consisting of F1 (Reward Belief; Items FI1–FI7) and F2 (Punishment Belief; Items FI8–FI10). Standardized factor loadings for the Reward Belief dimension (F1) ranged from .60 to .83, except for Item FI7, which had a lower loading of .47. For the Punishment Belief factor (F2), factor loadings were strong, ranging from .70 to .85. These values suggest that items generally have acceptable to strong relationships with their respective latent constructs. The covariance between the two latent factors was .70, indicating a moderately strong positive relationship between the two subdimensions of belief in divine retribution. Error variances (e1–e10) were within an acceptable range and did not indicate significant model misfit. Overall, the CFA results from the final test support the factorial structure found in the pilot study, further validating the scale's reliability and stability.

Table 4 Fit indices for the Belief in Divine Retribution Scale in confirmatory factor analysis (comparison of pilot and final tests)

Fit index	Good fit value	Acceptable fit value	Fit value (pilot test)	Fit value (final test)
χ^2/df	$0 \le \chi^2/df \le 3$	$3 \le \chi^2/df \le 5$	2.3	2.37
RMSEA	$0.00 \le RMSEA \le 0.05$	$0.05 \le RMSEA \le 0.08$	0.076	0.078
CFI	$0.95 \le CFI \le 1.00$	$0.90 \le CFI \le 0.95$	0.957	0.960
GFI	$0.95 \le GFI \le 1.00$	$0.90 \le GFI \le 0.95$	0.907	0.917
AGFI	$0.90 \le AGFI \le 1.00$	$0.85 \le AGFI \le 0.90$	0.854	0.874
NFI	$0.95 \le NFI \le 1.00$	$0.90 \le NFI \le 0.95$	0.927	0.934
TLI	$0.95 \le TLI \le 1.00$	$0.90 \le TLI \le 0.95$	0.930	0.947

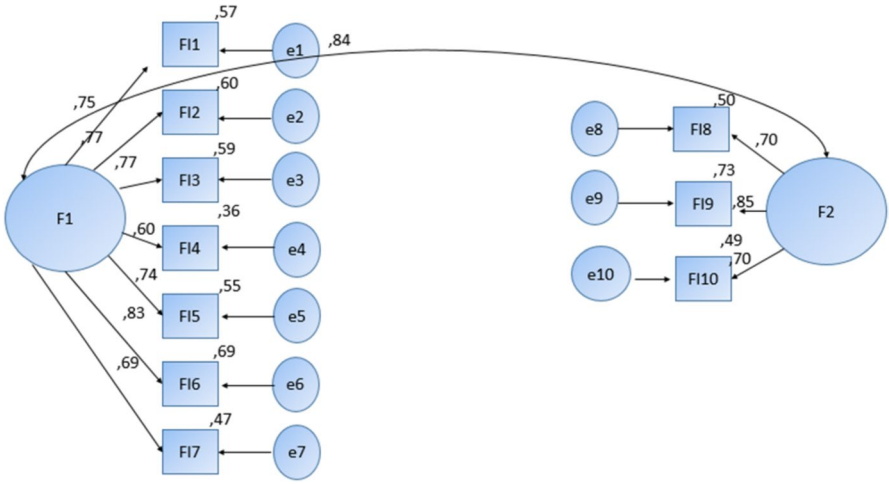

Fig. 2 Confirmatory factor analysis results from the final test

Table 5 shows item-level statistics and compares the original with the Turkish factor structures of the Belief in Divine Retribution Scale. The original two-factor structure, comprising divine reward and divine punishment, was preserved in the Turkish version as Reward Belief (Items 1–7) and Punishment Belief (Items 8–10).

For the Reward Belief subscale, corrected item-total correlations ranged from 0.584 to 0.776, with FI6 showing the strongest association ($r = 0.776$) and FI4 the weakest ($r = 0.584$). The "Cronbach's α if item deleted" values remained stable, ranging from 0.895 to 0.908, indicating that no item significantly reduced internal consistency. Within the Punishment Belief subscale, corrected item-total correlations ranged from 0.599 to 0.737, with Cronbach's α values between 0.898 and 0.906 if any single item was removed. Squared multiple correlations (R^2) also supported item reliability, falling between 0.385 and 0.656 across all items. These results demonstrate that all items contributed meaningfully to their respective factors and that internal consistency remained strong even when any individual item was removed. The Turkish version thus preserved both the factorial and psychometric integrity of the original instrument.

Table 6 presents the correlation coefficients between the Belief in Divine Retribution Scale (BDR) and the Penn Inventory of Religious Obsessions (PIRO), including its two subdimensions: Fear of God and Fear of Sinning. All correlations were statistically significant at the $p < .001$ level. The overall BDR score showed a moderate positive correlation with the total PIRO score ($r = .426$) and stronger associations with the Fear of God subscale ($r = .478$), as well as a weaker but still significant correlation with Fear of Sinning ($r = .343$). Similarly, the Reward Belief subscale was positively correlated with PIRO ($r = .404$), Fear of God ($r = .453$), and Fear of Sinning ($r = .324$). The Punishment Belief subscale also displayed positive correlations with all three: $r = .390$, .437, and .314, respectively. These results support the convergent validity of the Turkish version of the BDR scale, indicating that stronger

Table 5 Original and Turkish factor structures and item-level statistics for the Belief in Divine Retribution Scale

Original factor	Original items	Turkish factor	Turkish items	Item code	Scale mean if item deleted	Scale variance if item deleted	Corrected item-total correlation	Squared multiple correlation	Cronbach's α if item deleted
Divine reward	1–7	Reward Belief	1–7	FI1	32.83	66.599	0.676	0.583	0.902
				FI2	32.88	65.677	0.742	0.619	0.898
				FI3	32.94	65.916	0.723	0.555	0.899
				FI4	33.48	66.653	0.584	0.385	0.908
				FI5	33.05	65.336	0.686	0.517	0.901
				FI6	33.00	64.330	0.776	0.656	0.895
				FI7	32.94	65.340	0.637	0.461	0.904
Divine punishment	8–10	Punishment Belief	8–10	FI8	32.76	68.728	0.599	0.425	0.906
				FI9	32.95	65.211	0.737	0.583	0.898
				FI10	32.93	68.602	0.608	0.458	0.905

Table 6 Correlations between the Belief in Divine Retribution Scale and the Penn Inventory of Religious Obsessions (PIRO)

Scale/subscale	Total PIRO	Fear of God	Fear of Sinning
Belief in divine retribution (BDR)	$r = .426$	$r = .478$	$r = .343$
	$p < .001$	$p < .001$	$p < .001$
Reward Belief subscale	$r = .404$	$r = .453$	$r = .324$
	$p < .001$	$p < .001$	$p < .001$
Punishment Belief subscale	$r = .390$	$r = .437$	$r = .314$
	$p < .001$	$p < .001$	$p < .001$

beliefs in divine retribution are associated with increased religious obsessions, especially fear-related aspects of religiosity.

Discussion

This study examined the psychometric properties of the Turkish version of the Belief in Divine Retribution Scale (BDRS), developed by Naeem et al. (2024). To ensure cross-cultural validity, it is important to preserve the conceptual equivalence of the instrument in the target culture and verify the construct validity of the adapted scale (Göksal et al., 2023). Therefore, linguistic, content, and construct validity were carefully evaluated.

Content Validity Results

After the translation–back-translation process, the Content Validity Index (CVI), calculated using the Davis method, was found to be 1.00 for all items—indicating that the scale was conceptually appropriate for Turkish culture. To verify the data's suitability for factor analysis, the Kaiser–Meyer–Olkin (KMO) measure and Bartlett's test of sphericity were performed. A KMO value of .886 and a significant Bartlett's test ($\chi^2 = 2502.348$, df = 45, $p < .001$) supported the adequacy of the sample and data for factor analysis. These findings are consistent with the original scale development study (Naeem, 2024), which reported a KMO of .89 and a significant Bartlett's test ($\chi^2 = 2635.6$, $p < .001$).

Exploratory Factor Analysis

In exploratory factor analysis, eigenvalues greater than 1.00 were used to determine the number of factors (Hair et al., 2014; Kaiser, 1974), and all item loadings exceeded .30—ranging from .60 to .86. This surpasses the minimum threshold recommended in the literature (Büyüköztürk, 2022; Costello & Osborne, 2005). The original study reported loadings between .48 and .75, and the consistency across studies supports the scale's structural validity. Similar to the original version, the Turkish form also identified two dimensions—Reward Belief and Punishment

Belief—that explained 64.91% of the total variance, compared to 42.59% in the original study. This difference may result from cultural and sample-specific factors or the enhanced conceptual clarity achieved through the adaptation process. Previous research indicates that cross-cultural adaptations often show variability in explained variance depending on how coherently participants perceive the construct (Van de Vijver & Leung, 1997).

Confirmatory Factor Analysis

Confirmatory factor analysis (CFA) indicated an acceptable model fit, with indices such as RMSEA = 0.078, GFI = 0.948, AGFI = 0.889, CFI = 0.975, TLI = 0.959, and χ^2/df = 2.370. These results fall within acceptable ranges (Byrne, 2010; Hu & Bentler, 1999). The original study also supported a two-factor structure with strong fit indices (χ^2/df = 2.23, RMSEA = 0.04, CFI = 0.98, TLI = 0.97). Therefore, the CFA findings for the Turkish version are consistent with the original model, with only minor variation in RMSEA, which is typical in cross-cultural adaptations (Kasapoğlu, 2024; Kuşat, 2016).

Additionally, Items FI4 ("I forgive the biggest mistake of others thinking that on the Day of Resurrection Allah will forgive my shortcomings") and FI7 ("I feel relieved considering that the reward for good deeds, which I do not get in this world, would be received hereafter") showed slightly lower factor loadings compared to other items.

In the Turkish cultural context, these items might represent more abstract or spiritually nuanced beliefs shaped by personal interpretations of forgiveness and delayed divine reward, which can differ significantly among individuals.

Furthermore, cultural emphasis on immediate interpersonal reciprocity may reduce the consistency of endorsement for concepts involving delayed divine consequences, leading to their relatively lower loadings. Nevertheless, both items stayed within acceptable limits for newly adapted scales, supporting their inclusion in the final version.

Internal Consistency and Reliability

Corrected item-total correlation coefficients in this study ranged from .584 to .776, all above the commonly accepted threshold of .30, indicating that each item contributed significantly to the scale structure (Field, 2018). Although such analysis was not reported in the original study, the consistency in reliability coefficients across subscales supports preserving item integrity during the translation and cultural adaptation process.

Internal consistency, a key indicator of a scale's reliability, was high throughout the entire scale and its subscales. Cronbach's alpha for the overall scale was .911. For the Reward Belief and Punishment Belief subscales, the values were .889 and .799, respectively. These results are consistent with those reported in the original study by Naeem (2024): $\alpha = .89$ (total), .86 (Reward), and .84 (Punishment). Both versions demonstrated strong internal consistency and support the cultural and conceptual validity of the adapted tool.

Convergent Validity

Criterion validity was assessed by examining the correlation between the BDRS and the Penn Inventory of Scrupulosity (PIOS). A significant and positive correlation was found between the total scores on both scales ($r = .532$, $p < .001$). This supports previous research suggesting that belief in divine retribution and religious obsessions share underlying cognitive–affective processes (Abramowitz et al., 2002; Naeem, 2024). Naeem also reported significant correlations with other religious-cognitive constructs, such as the God Image and Religious Meaning-Making Scales. Likewise, the strong correlation identified in this study reinforces the conceptual link between the BDRS and religious-cognitive dimensions within Turkish culture.

It is important to emphasize that belief in divine retribution comprising beliefs in divine reward and punishment is a core tenet of Islamic theology and should not be conflated with clinical constructs such as religious obsessions or scrupulosity. In this study, the positive correlation between the BDRS and the Penn Inventory of Scrupulosity ($r = .426$, $p < .001$) is interpreted as evidence of convergent validity, reflecting that belief in divine consequences may co-occur with heightened sensitivity to religious themes in some individuals. However, this association does not imply pathology. Rather, it underscores the psychological salience of divine justice beliefs within religious cognition. As confirmed by our scale construction methodology, all BDRS items were developed to assess normative theological beliefs without reflecting symptoms of distress or obsessive–compulsive behavior. Therefore, the moderate correlation with religious obsessions reflects overlapping cognitive–emotional domains (e.g., fear of sin, concern for divine justice) rather than conceptual equivalence. This interpretation aligns with prior literature suggesting that strongly internalized beliefs about divine punishment may amplify religious sensitivity, particularly among devout individuals, without indicating mental illness (Exline et al., 2017; Stevens & Smith-Schrandt, 2023). Furthermore, the distinct two-factor structure Reward Belief and Punishment Belief maintains theological integrity while allowing for psychological exploration.

Clinical İmplications

These results suggest that the BDRS not only assesses cognitive belief structures but also identifies internal conflict and sensitivities related to religious themes. Previous research has shown that beliefs in a punitive God are associated with guilt, shame, and religious anxiety—particularly among devout individuals—and may contribute to scrupulosity and moral conflict (Exline et al., 2017; McCullough & Willoughby, 2009). Due to ongoing debates about scale contamination in religious and spiritual psychometrics, the current adaptation carefully reviewed item content to prevent confounding signs of psychological distress or social functioning with beliefs about divine punishment.

Turkey's predominantly Islamic cultural environment, where religious narratives often emphasize both mercy and justice, may shape respondents' interpretations of divine reward and punishment in ways that differ from other contexts.

Compared to the original study conducted in Pakistan, where collectivist norms and religious education similarly reinforce these beliefs, the Turkish

context might emphasize individual moral agency and personal accountability before God more strongly. This subtle balance between collective moral order and personal responsibility could help explain some differences in factor loadings and variance distribution seen between the two adaptations.

Limitations

This study has several limitations. First, the sample mainly consisted of young adults aged 18–25 living in Türkiye, which may limit how well the findings apply to other age groups. Additionally, the sample was mostly Muslim, with little representation from other religious groups, possibly restricting the relevance of the results to more religiously diverse populations. Second, data were collected through self-report measures, which might be influenced by social desirability bias. Third, the cross-sectional design prevents any conclusions about the scale's stability over time or its ability to predict outcomes in long-term studies. Finally, although the sample size was adequate for factor analysis, future research should verify these findings in more age-diverse, religiously varied, and clinically different populations to improve external validity.

Test–retest reliability could not be assessed in this study; therefore, future research should examine the temporal stability of the scale.

Conclusion

This study offers a comprehensive assessment of the validity and reliability of the Turkish version of the Belief in Divine Retribution Scale (BDRS). The findings confirm that the original two-factor structure (Reward Belief and Punishment Belief) is preserved in the Turkish sample and demonstrate high internal consistency. Both exploratory and confirmatory factor analyses support the scale's construct validity, while convergent validity results indicate a significant relationship between belief in divine retribution and religious obsessions.

These findings demonstrate that the BDRS is a psychometrically robust tool suitable for both clinical and academic use. The scale provides a valuable resource for research on the psychological effects of religious belief systems, especially in cases involving religious obsessions or cross-cultural studies. Future research involving different age groups, levels of religiosity, and cultural contexts will help enhance the scale's psychometric reliability and wider applicability.

Appendix

See Tables 7 and 8.

Table 7 Belief in Divine Retribution Scale—original English items with response options

Item No	English item	Response options
1	After every noble work, I am convinced I will receive its reward hereafter	1 = Never 2 = Rarely 3 = Sometimes 4 = Often 5 = Always
2	My belief about divine retribution is a big reason for my satisfaction	1–5
3	To do anything good, I hope to be rewarded later by Allah rather than human beings	1–5
4	I forgive the biggest mistake of others thinking that on the Day of Resurrection Allah will forgive my shortcomings	1–5
5	If I have someone's secret, I keep that to myself so that on the day of judgment Allah would keep my secret	1–5
6	I become polite and give concessions to the people while dealing with them, so that Allah may deal with me politely	1–5
7	I feel relieved considering that the reward for good deeds, which I do not get in this world, would be received hereafter	1–5
8	After making someone feel ashamed, I feel that I can feel the same shame	1–5
9	Whenever I criticize someone because of a flaw, I get worried that Allah will make me suffer from the same flaw	1–5
10	Whenever I hurt someone, I feel overwhelmed by the thoughts related to the consequences of my actions	1–5

Table 8 Belief in Divine Retribution Scale—Turkish items with response options

Madde No	Türkçe madde	Yanıt Seçenekleri
1	Her erdemli işten sonra, karşılığını ahirette alacağıma inanıyorum	1 = Asla 2 = Ara sıra 3 = Bazen 4 = Sık sık 5 = Her zaman
2	İlahi adalet inancım, yaşadığım zorluklara/sıkıntılara dayanmanın en büyük nedenlerinden biridir	1–5
3	İyi bir şey yaptığımda, insanlardan ziyade Allah tarafından ödüllendirilmeyi umuyorum	1–5
4	Kıyamet günü Allah'ın benim kusurlarımı affedeceğini düşünerek başkalarının büyük hatalarını affederim	1–5
5	Eğer birinin sırrına sahipsem, bunu kendime saklarım ki kıyamet gününde Allah da benim sırrımı saklasın	1–5
6	İnsanlara karşı nazik davranır ve hoşgörülü olmaya çalışırım ki, Allah da bana nazik ve hoşgörülü davransın	1–5
7	Bu dünyada karşılığını alamadığım iyiliklerin ödülünü ahirette alacağımı düşünerek rahatlarım	1–5
8	Birini utandırdığımda aynı utancı benim de yaşayabileceğimi hissederim	1–5
9	Ne zaman birini bir kusuru nedeniyle eleştirsem, Allah'ın da aynı kusuru bana yaşatacağından endişelenirim	1–5
10	Birini incittiğimde, yaptıklarımın sonuçlarına dair düşüncelerden bunalmış hissederim	1–5

Author Contributions All authors participated in developing the study's conception and design. All authors have read and approved the final manuscript.

Funding No funding was provided to support the preparation of this manuscript.

Data Availability Data will be available upon reasonable request from the corresponding author.

Declarations

Conflict of interest All authors declare that there are no conflicts of interest.

Ethical Approval This study received approval from the Maltepe University Non-Interventional Research Ethics Committee (Decision No: 2024/22–02). Additionally, permission to use and adapt the Belief in Divine Retribution Scale was obtained through email communication with the original developers of the instrument. All participants were informed of the study's purpose and voluntarily provided informed consent before participating. Participation was anonymous, and no personal identifiers were collected.

Open Access This article is licensed under a Creative Commons Attribution-NonCommercial-NoDerivatives 4.0 International License, which permits any non-commercial use, sharing, distribution and reproduction in any medium or format, as long as you give appropriate credit to the original author(s) and the source, provide a link to the Creative Commons licence, and indicate if you modified the licensed material. You do not have permission under this licence to share adapted material derived from this article or parts of it. The images or other third party material in this article are included in the article's Creative Commons licence, unless indicated otherwise in a credit line to the material. If material is not included in the article's Creative Commons licence and your intended use is not permitted by statutory regulation or exceeds the permitted use, you will need to obtain permission directly from the copyright holder. To view a copy of this licence, visit http://creativecommons.org/licenses/by-nc-nd/4.0/.

References

Abramowitz, J. S., Huppert, J. D., Cohen, A. B., Tolin, D. F., & Cahill, S. P. (2002). Religious obsessions and compulsions in a non-clinical sample: The Penn Inventory of Scrupulosity (PIOS). *Behavior Research and Therapy, 40*(7), 825–838. https://doi.org/10.1016/S0005-7967(01)00070-5

Adega, A. P. (2023). Playing god: Human agents and the punishment of evil in African religion. *African Journal of Humanities and Contemporary Education Research, 11*(1), 109–123.

Altın, M. (2009). *A cross-cultural investigation of obsessive compulsive disorder symptomatology: The role of religiosity and religious affiliation [Unpublished doctoral dissertation]*. Middle East Technical University.

Bambling, M. (2025). The problem of scale contamination and construct validity in mental health, social science and spirituality-related research. *Health and Social Care Chaplaincy, 12*(2), 210–216. https://doi.org/10.1558/hscc.31277

Bulut, N. (2021). Manifestations of the belief in God and morality in action. *Journal of Theological Studies, 55*, 473–497. https://doi.org/10.29288/ilted.887924

Büyüköztürk, S. (2022). *Handbook of data analysis for social sciences: Statistics, research design, SPSS applications, and interpretation* (28th ed.). Pegem Akademi.

Byrne, B. M. (2010). *Structural equation modeling with AMOS: Basic concepts, applications, and programming* (2nd ed.). Routledge.

Costello, A. B., & Osborne, J. W. (2005). Best practices in exploratory factor analysis: Four recommendations for getting the most from your analysis. *Practical Assessment, Research, and Evaluation, 10*(1), 7.

Cristobal, E., Flavián, C., & Guinalíu, M. (2007). Perceived e-service quality (PeSQ): Measurement validation and effects on consumer satisfaction and website loyalty. *Managing Service Quality: An International Journal, 17*(3), 317–340. https://doi.org/10.1108/09604520710744326

DeVellis, R. F. (2012). *Scale development: Theory and applications* (3rd ed.). Sage Publications.
Exline, J. J., Wilt, J. A., Stauner, N., Harriott, V. A., & Saritoprak, S. N. (2017). Self-forgiveness and religious/spiritual struggles. In L. Woodyatt, E. Worthington Jr., M. Wenzel, & B. Griffin (Eds.), *Handbook of the psychology of self-forgiveness* (pp. 173–189). Springer. https://doi.org/10.1007/978-3-319-60573-9_10
Field, A. (2018). *Discovering statistics using IBM SPSS Statistics* (5th ed.). Sage.
Foa, E. B., Kozak, M. J., Salkovskis, P. M., Coles, M. E., & Amir, N. (2001). The validation of a new obsessive–compulsive disorderscale: The Obsessive–Compulsive Inventory. Psychological Assessment, 14(4), 485–496. https://doi.org/10.1037/1040-3590.14.4.485
Göksal, S., Yüzbaşı, D. V., & Kunuroğlu, F. (2023). Adaptation of the body punishment scale for use in Turkey. *Psychiatry, Psychology and Law,*. https://doi.org/10.1080/13218719.2022.2155723
Hair, J. F., Black, W. C., Babin, B. J., & Anderson, R. E. (2014). *Multivariate data analysis* (7th ed.). Pearson.
Hamlaoui, H., Chowdhury, F., Khurshid, F., & Yaqub, Z. (2025). A qualitative exploration of lived experiences of religious OCD within Muslim communities. *Journal of the British Islamic Medical Association, 19*(7), 1–14.
Hassan, W., El Hayek, S., de Filippis, R., Eid, M., Hassan, S., & Shalbafan, M. (2024). Variations in obsessive compulsive disorder symptomatology across cultural dimensions. *Frontiers in Psychiatry, 15*, Article 1329748. https://doi.org/10.3389/fpsyt.2024.1329748
Hernández, A., Hidalgo, M. D., Hambleton, R. K., & Gómez-Benito, J. (2020). International Test Commission guidelines for test adaptation: A criterion checklist. *Psicothema, 32*(3), 390–398. https://doi.org/10.7334/psicothema2019.306
Hill, P. C., & Pargament, K. I. (2003). Advances in the conceptualization and measurement of religion and spirituality: Implications for physical and mental health research. *American Psychologist, 58*(1), 64–74. https://doi.org/10.1037/0003-066X.58.1.64
Hu, L. T., & Bentler, P. M. (1999). Cutoff criteria for fit indexes in covariance structure analysis: Conventional criteria versus new alternatives. *Structural Equation Modeling, 6*(1), 1–55. https://doi.org/10.1080/10705519909540118
İnözü, M., Keser, E., & Karancı, A. N. (2017). Psychometric properties of the Turkish version of the Penn Inventory of Scrupulosity. *Turkish Journal of Psychiatry, 28*(4), 278–286. https://doi.org/10.5080/u14879
Kaiser, H. F. (1974). An index of factorial simplicity. *Psychometrika, 39*(1), 31–36. https://doi.org/10.1007/BF02291575
Karagöz, Y. (2016). *Applied statistical analyses using SPSS 23 and AMOS 23*. Nobel Academic Publishing.
Kasapoğlu, F. (2016). Development of the spiritual orientation scale: Validity and reliability. *Journal of Inonu University Faculty of Education*. https://doi.org/10.17679/iuefd.16360640
Kasapoğlu, F. (2024). *Psychometric properties of the Turkish version of the Spiritual Bypass Scale*. Advance online publication. https://doi.org/10.7827/turkishstudies.69317
Kavurkacı, E. Z. (2023). Religious obsessions and schema therapy: Analyses from a spiritual counseling perspective. *Turkish Journal of Spiritual Counseling and Guidance, 7*, 9–49. https://doi.org/10.56432/tmdrd.1275642
Koenig, H. G., & Carey, L. B. (2025). Approaches for analyzing the relationship between spirituality and health using measures contaminated with indicators of mental and social health. Journal of Religion and Health, 64(2), 1–11. https://doi.org/10.1007/s10943-025-02249-y
Koenig, H. G., & Al Zaben, F. (2021). Psychometric validation and translation of religious and spiritual measures. *Journal of Religion and Health, 60*(5), 3467–3483. https://doi.org/10.1007/s10943-021-01373-9
Koenig, H. G., & Carey, L. B. (2024). Religion, spirituality and health research: Warning of contaminated scales. *Journal of Religion and Health, 63*(5), 3729–3743. https://doi.org/10.1007/s10943-024-02112-6
Kuşat, A. (2016). Adaptation of the religious worldview scale into Turkish: A validity and reliability study. *The Journal of International Social Research, 9*(43), 2502–2512. https://doi.org/10.17719/JISR.20164317809
Laurin, K., Shariff, A. F., Henrich, J., & Kay, A. C. (2012). Outsourcing punishment to God: Beliefs in divine control reduce earthly punishment. *Proceedings of the Royal Society B: Biological Sciences, 279*, 3272–3281. https://doi.org/10.1098/rspb.2012.0615

McCullough, M. E., & Willoughby, B. L. B. (2009). Religion, self-regulation, and self-control: Associations, explanations, and implications. *Psychological Bulletin, 135*(1), 69–93. https://doi.org/10.1037/a0014213

Mutahhari, M. (2021). *Philosophy of ethics (Vol 16)*. Önsöz Publishing.

Naeem, T., Ghayas, S., & Khan, A. H. (2024). Construction and validation of the belief in divine retribution scale for Pakistani Muslims. *Journal of Religion and Health, 63*(6), 3744–3761. https://doi.org/10.1007/s10943-023-01997-z

American Psychiatric Association. (2013). *Diagnostic and statistical manual of mental disorders* (5th ed.). American Psychiatric Publishing.

Sica, C., Novara, C., Sanavio, E., Dorz, S., & Coradeschi, D. (2002). Obsessive-compulsive cognitions among cultures. In R. Frost & G. Steketee (Eds.), *Cognitive approaches to obsessions and compulsions: Theory, assessment and treatment* (pp. 371–383). Pergamon.

Sigerson, L., & Cheng, C. (2018). Scales for measuring user engagement with social network sites: A systematic review of psychometric properties. *Computers in Human Behavior, 83*, 87–105. https://doi.org/10.1016/j.chb.2018.01.023

Stevens, S., & Smith-Schrandt, H. L. (2023). Scrupulosity obsessive–compulsive disorder in children. *Journal of Psychosocial Nursing and Mental Health Services, 61*(11), 10–16. https://doi.org/10.3928/02793695-20231011-03

Summermatter, A., & Kaya, Ç. (2017). An overview of spiritually oriented cognitive behavioral therapy. *Spiritual Psychology and Counseling, 2*, 31–53. https://doi.org/10.12738/spc.2017.1.0017

Tabachnick, B. G., & Fidell, L. S. (2013). *Using multivariate statistics* (6th ed.). Pearson.

Tavşancıl, E. (2014). *Measurement of attitudes and data analysis with SPSS* (5th ed.). Nobel Publishing.

Tek, C., & Ulug, B. (2001). Religiosity and religious obsessions in obsessive-compulsive disorder. *Psychiatry Research, 104*(2), 99–108. https://doi.org/10.1016/s0165-1781(01)00310-9

Tolin, D. F., Abramowitz, J. S., Kozak, M. J., & Foa, E. B. (2001). Fixity of belief, perceptual aberration, and magical ideation in obsessive-compulsive disorder. *Journal of Anxiety Disorders, 15*(6), 501–510. https://doi.org/10.1016/S0887-6185(01)00078-0

Toprak, T. B., & Özçelik, H. N. (2024). Psychotherapies for the treatment of scrupulosity: A systematic review. *Current Psychology, 43*, 22361–22375. https://doi.org/10.1007/s12144-024-06040-2

Van de Vijver, F. J. R., & Leung, K. (1997). *Methods and data analysis for cross-cultural research*. Sage.

Vishkin, A., Bigman, Y., & Tamir, M. (2014). Religion, emotion regulation, and well-being. In C. Kim-Prieto (Ed.), *Religion and spirituality across cultures* (pp. 149–166). Springer. https://doi.org/10.1007/978-94-017-8950-9_13

Publisher's Note Springer Nature remains neutral with regard to jurisdictional claims in published maps and institutional affiliations.

Authors and Affiliations

Ece Alagöz[1] · Merve Bat Tonkuş[2]

✉ Ece Alagöz
ecealagoz@maltepe.edu.tr

Merve Bat Tonkuş
mervebat.tonkus@yeniyuzyil.edu.tr

[1] Maltepe University, Istanbul, Turkey

[2] İstanbul Yeni Yüzyıl University, Istanbul, Turkey